Fermilab

TM-1201
2527.000

A BEAMLINE TRANSITION RADIATION DETECTOR FOR MW

Herman Haggerty

June 6, 1983

Recent developments[1] of transition radiation detectors (TRD's) indicate that an efficient and practical system can be deployed for beam line particle tagging for momenta greater than 200 GeV/c. This note describes the design of a prototype system to be tested at Fermilab in Fall, 1983. Pre-prototype testing was done at BNL in March, 1983 and has been followed up by bench testing of gasses and electronics at Fermilab. The design goal is a modular system which puts few constraints on beam line configuration and hence can be adapted to any high energy secondary beam.

I. History of Beam Line TRD's at Fermilab

A successful test of a lithium foil TRD was made in the M6 line by the U. Md. group in 1981[2]. The radiator consisted of 1600 foils each 0.0015" thick followed by a 20' dipole to separate the x rays from the charged beam. The x-ray detector was a solid block of scintillator glued to a phototube. For efficiency and redundancy two identical

systems were installed. Pions of 200 GeV/c and 300 GeV/c were positively tagged and thus distinguished from non-registering heavier particles.

To adapt the above technique for use in a Tevatron beam line, several constraints are imposed on the beam design. First, since manufacturing and support difficulties impose a limit on the area of the lithium foils, the TRD system must be located in a position where the beam is small and where dipoles can cleanly separate the charged beam away from the x-rays. Second, the beam must be fairly halo free since charged particles traversing the scintillation detector deposit orders of magnitude more energy than a transition radiation (TR) x-ray.

Since the MW beam design to date accepts a large momentum bite (and hence larger foci) and since the scheduled users of MW need $\sim 10^7$ Hz an alternative to the initial successful TRD scheme was sought.

II. Multi-Segmented TRD's

Absorption of the generated x-rays by subsequent foils limits the number of foils which can be efficiently used in a radiator. Since the lower energy x-rays have a much

higher absorption cross section than the higher energy x-rays, a second effect of large numbers of foils is to shift the mean energy of penetrating x-rays higher. For most detector systems, lower energy x-rays are more desirable since they give up all their energy in photoelectric effect whereas higher energy x-rays Compton scatter. In addition, to detect lower energy x-rays much less massive detectors are needed.

The radiating module of the prototype system was chosen as 200 foils of 0.00075" polyethylene each separated by 0.020". The expected x-ray energy spectrum produced by 530 GeV pions, kaons and protons is shown in Fig. 1a. All of the predicted spectra have been generated by programs provided by the U. Md. group. For comparison, the spectra for pions from 20 foils and 2000 foils are shown, appropriately normalised (Fig. 1b). The choice of 200 foils affords both efficient use of radiators and a manageable total number of detectors.

The x-ray detector has been chosen to be a three layer stack of multi-wire proportional chambers (MWPC's) with total sensitive gas thickness of 18 mm. The multi layer structure has been chosen to reduce drift times. The gas mixture is a 1:1 mix (by volume) of xenon and methane. Wire spacing is 1 mm. This arrangement produces about 1.7

transition radiation x-rays per particle, of which roughly one is detected. The prediction for the expected number of detected x-rays from pions for a 200 foil stack followed immediately by the three chamber array is shown in Fig. 2. For the total system there will be ten identical modules each consisting of a 200 foil radiator followed by a three plane MWPC detector. The material seen by the beam will be 1.4 grams (5% of an interaction length).

The critical problem for a TRD system of this type is the energy deposition from charged particles. Since the x-ray gives all of its energy to a single short range photoelectron, whereas a charged particle deposits energy all along its path, the discrimination between x-rays and charged particles should be based on local energy deposition.[1]

III. TRD Electronics

To take advantage of the local energy deposition differences (between TR x-ray conversions and charged particle dE/dx) a low input impedance fast amplifier is needed. The amplifier speed should be matched to the

collection time for the ionization produced by the TR x-ray conversions, typically 1/10 of the total chamber drift time. The discriminator for each channel can then be set to fire efficiently for x-ray conversions but inefficiently for the dE/dx of charged particles.

To reduce electronics costs, it is desirable to instrument the smallest number of individual channels consistent with a functional detector. The number of wires (in a plane perpendicular to the beam) which can be ganged together is determined by beam rate and structure. The design criterion is to allow operation at a beam rate of 10^7 Hz., and a single amplifier-discriminator rate of 10^5 Hz. Since the detected x-ray rate (from pions at 530 GeV/c) is about one per foil array, and this x-ray is converted in one of three stacked MWPC planes (100 wires per plane), about three wires can be ganged together (to run at 10^5 Hz. per gang). Thus, about 1000 amplifier channels are required for the complete system.

IV. Pre-prototype Tests at BNL

In order to verify the practicality of the proposed scheme, a 200 foil radiator was constructed and two proportional chambers were partially instrumented as detectors. The MWPC's were by no means optimised as TR detectors in that they had a substantial non sensitive gas layer; however all their properties were easily included in the Monte Carlo simulations. The amplifier used for the single wire gang tests presented here is shown in Fig. 3. The amplifier transresistance was $\sim$15mV/μA.

The beam used was the BNL A2 test beam tuned for 2 GeV. A gas Cerenkov counter tagged the electron population ($\sim$0.5%). A layout of the test configuration is shown in Fig. 4.

Two techniques were used to positively identify the transition radiation. The simplest technique was to insert 0.050" aluminum downstream of the TR to absorb the x-rays. On alternate runs the aluminum was put upstream of the TR and hence would not absorb the x-rays (but would keep mass in the beam constant). Alternatively, the TR was removed and replaced with an equivalent thickness of polyethylene. Both techniques indicated that the TR was readily detectable even in a crude setup. In addition, one test was made to investigate the possibility that bremsstrahlung in the polyethylene foils was simulating TR. In this case an

equivalent thickness of polyethylene was mounted downstream of the aluminum when the aluminum was in position to absorb x-rays. Bremsstrahlung was shown not to contribute significantly to the detected x-ray sample.

Fig. 5a shows the prediction for detected energy (TR+dE/dx) for the 2mm MWPC (sensitive gas thickness 0.5"), and the observed energy spectrum is shown in Fig. 5b. The absolute energy scales were calibrated by an Fe^{55} source (5.9 KeV x-ray).

Two questions arise from examination of this data. The first question is why the dE/dx peak is so low. The expected dE/dx for this gas mixture in this chamber (1:1 mix xenon:methane, gas thickness 0.5") is 5.0 KeV. The second question is why the yield of TR x-ray conversions is low by a factor of two.

On the first question, further measurements at Fermilab were done with various ratios of xenon to methane. Shown in Fig. 6. are data from Fe^{55} (5.9 KeV x-ray) and Ru^{106} (e source) for various gas mixtures and operating voltages in a 0.6 cm thick chamber. (The e's from the Ru source passed through the chamber and into a trigger scintillator.) The expected ratios were not observed. The gas gain for these measurements was $\sim 3 \times 10^4$. Evidently the signals are not

proportional to deposited energy in this operating region. If a space charge effect is significantly altering the local E field (and hence suppressing charge collection from more distant ionization) then the observed enhancement of the ratio of x-ray photoelectron pulse height to the dE/dx pulse height can be realized. However, in this space charge model, it is not clear what the effect would be with simultaneous TR + dE/dx. Clearly an in-beam measurement with a final prototype is called for before precise efficiencies will be known.

On the question of low TR yield, several weak statements can be made. First the yield is from uncorrected data taken in a crude set up. The beam momentum was set to 2 GeV and electrons were tagged with a single Cerenkov counter. No verification of the electron momentum was made. Measurements made on the 1 mm chamber with more complete instrumentation showed that the electrons were often accompanied by other particles. No doubles rejection was used in these first tests. If these accompanying particles were hadrons or low energy electrons from showers, then the results would show an artificially high count from non-radiating particles. In light of these and other confounding circumstances, the somewhat low observed yield is not considered devastating.

Since the cluster counting method is based on local and not integrated energy deposition, the prototype 1 mm chamber was instrumented with discriminators having adjustable thresholds. The object was to find the discrimination level which would pass the largest number of x-ray conversions and block the largest number of non- radiating charged particle dE/dx depositions. The lower bound of the sensitivity of this method is just the result integrating total energy. The expectation for the percentage difference

$$(N(dE/dx+TR)>E-N(dE/dx)>E)/N(dE/dx)>0$$

as a function of discriminator threshold (E) from the 1 mm chamber is shown in Fig. 7. At the maximum, about 18% more events should be counted due to TR in this set up. This curve is based on measuring the total energy and does not include any dE/dx suppression from measuring local pulse height. Experimental data are shown in Fig. 8, both for events in which single hits only (in the chamber) are allowed, and for events for which double hits are accepted. The larger rate for the double hits is not necessarily spurious. In particular, the photoelectron often will have sufficient range to register in adjacent wires, especially for low thresholds. However, no distinction was made between events with one or with two charged particles in the

triggering scintillators. The amplifier-discriminator used for these tests (Fig. 9) exhibited an imprecise threshold resulting in the somewhat washed out resolution. The experimental data has been corrected for solid angle. This, however, is a large correction since the instrumented area of the chamber was five times smaller than the trigger counter, and the data again must be assigned a large normalization uncertainty. Nevertheless, the results show strong similarity between the expected yield using no local clustering information and the measured yield using discriminators which are somewhat sensitive to clustering.

The advantage of cluster energy discrimination clearly diminishes as the chamber thickness and gas density decrease. Each chamber plane should be thick enough to contain most of the energy for an x-ray conversion, yet thin enough to minimise dE/dx and drift time. In the tested prototype, the 6 mm gap corresponds to the range of a 25 KeV electron.

V. Projected Efficiency in MW

Assuming that all problems with operating in a real environment are solved, the expected utility of the TR system can be computed from the Monte Carlo x-ray and dE/dx

statistics. Fig. 10 shows the measured overlap using no clustering information between dE/dx from Ru^{106} electrons and Fe^{55} x-rays. This overlap can be used as a lower bound for estimating the dE/dx contamination in discriminated TR signals. In table I are listed the projected yields for detected x-rays (for a full system of 10 TRD modules) from beams of 530 GeV/c and 800 GeV/c produced by a 1 TeV/c incident beam. Also listed are the expected particle percentages for pions, kaons, and protons. The expected contamination from dE/dx triggers can be read from Fig. 10. If a cut of 6 KeV is used then each MWPC plane will contribute at most .05 hits per charged particle. Since there are thirty planes altogether, 1.5 hits will be generated for each charged particle. Since kaons at 530 GeV generate only 1.7 detected x-rays it is clear that these dE/dx triggers must be reduced to give a sensible detector. The bottom line of course is the tag which defines a kaon, pion, or proton. On an event by event basis there will be a given multiplicity of MWPC hits and each multiplicity will be correlated to the identity of the particle. Table II lists the average components of a sample for a given hit multiplicity for 530 GeV and 800 GeV, both for the case of complete dE/dx suppression and no dE/dx suppression. (All of these tables use the expected beam particle populations from Table I.) For expample, at 530 GeV (-) for full dE/dx suppression the sample of particles giving a single hit would be composed of

π^- : k^- : p^- =.003 : .0118 : .0011 = 19% : 74% : 7%.

The conclusion that can be drawn from this table is that a useful enrichment of the k^- sample and the π^+ sample can be achieved with a $\sim$5% interaction length TRD system. Since the system proposed is modular, the final configuration can easily be adjusted after more thorough and precise measurements are made with the prototype.

V. Acknowledgements

Developement of a TRD system is a continuing effort of the Fermilab Experimental Areas Department Facility Support Group in cooperation with groups from U. Pittsburgh, U. Md. and George Mason U. The Project was initiated by D. Green of Fermilab. Conceptional devlopement was aided considerably by contributions from E. Engles, and P. Shephard of U. Pittsburgh. G. B. Yodh of U. Md. and R. Ellsworth of George Mason U. have provided constant advice and suppport. The electronics were developed by S. Hansen, the 1 mm MWPC provided by H. Fenker, and the TR hardware built by J. Guerra, H. Schram, G. Gillespie and R. Cantal from Fermilab. The data acquisition system for the 1 mm chamber was provided by the U. Pittsburgh group. Especially helpful during the BNL tests were S. Hansen from Fermilab and E. Engles, P. Shephard and S. Mani from

Pittsburgh. The assistance and support of T. Blair, T. Ludlam and V. Polychronakos of the BNL staff made the testing period at the AGS pleasant and productive. The full cooperation of the BNL HEEP group and the Fermilab PREP group is appreciated. Special thanks go to S. Pordes and D. Green for enlightening discussions and most careful readings of this manuscript.

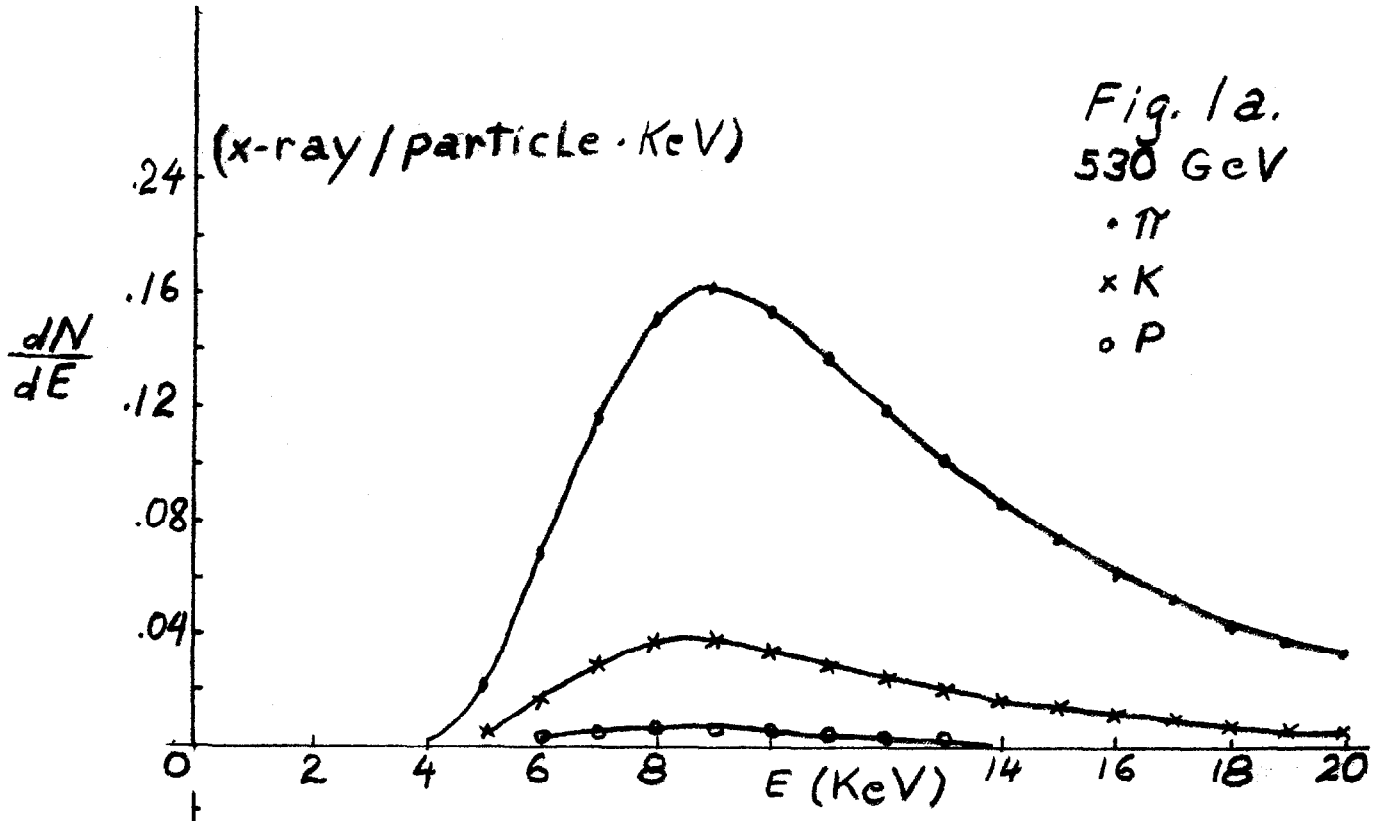

Fig. 1a.
530 GeV
• π
× K
○ P

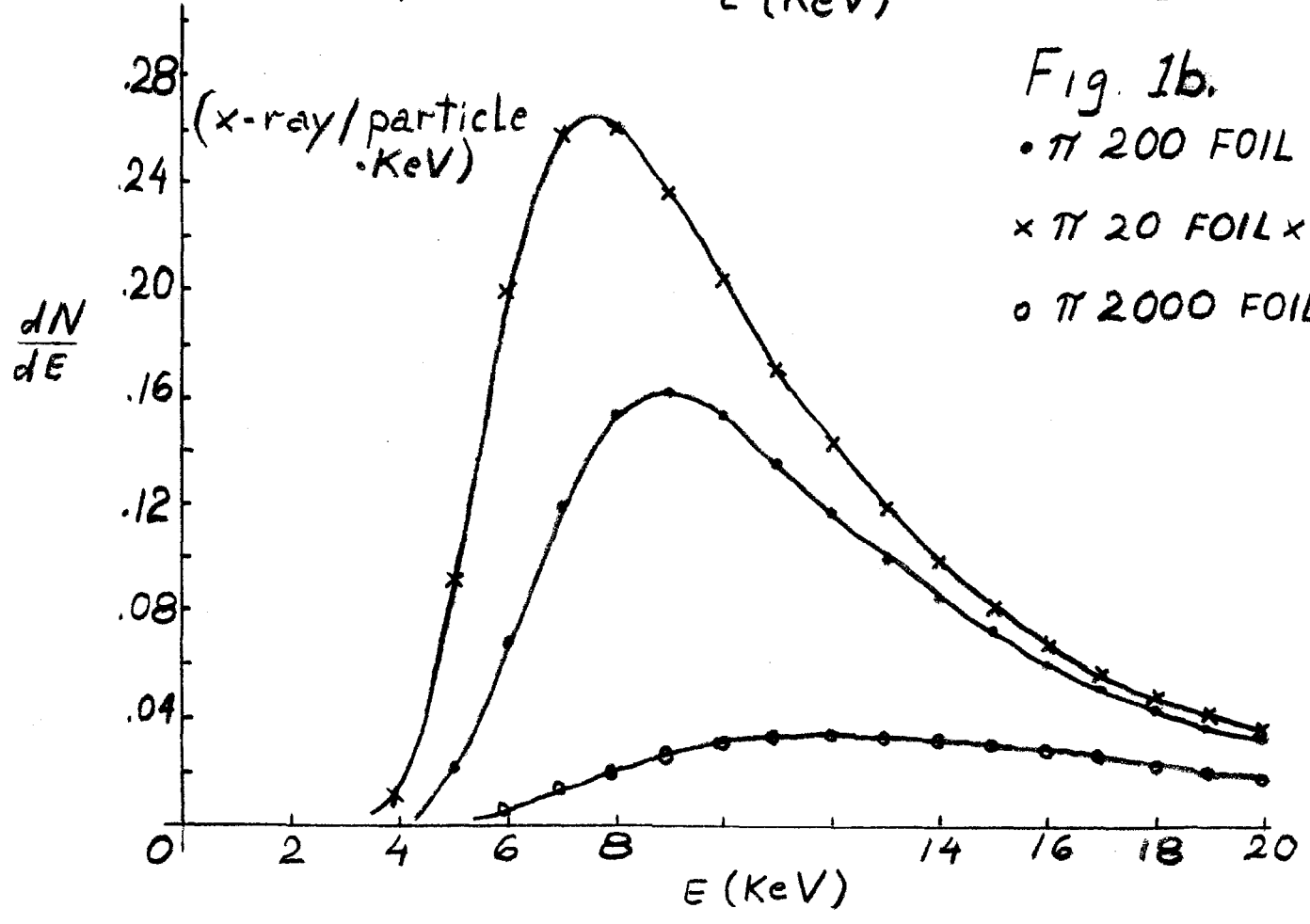

Fig. 1b.
• π 200 FOIL
× π 20 FOIL × 10
○ π 2000 FOIL ÷ 10

Fig. 2

530 GeV π

1.8 cm $Xe : CH_4$

.8 x-ray detected
(MONTE CARLO)

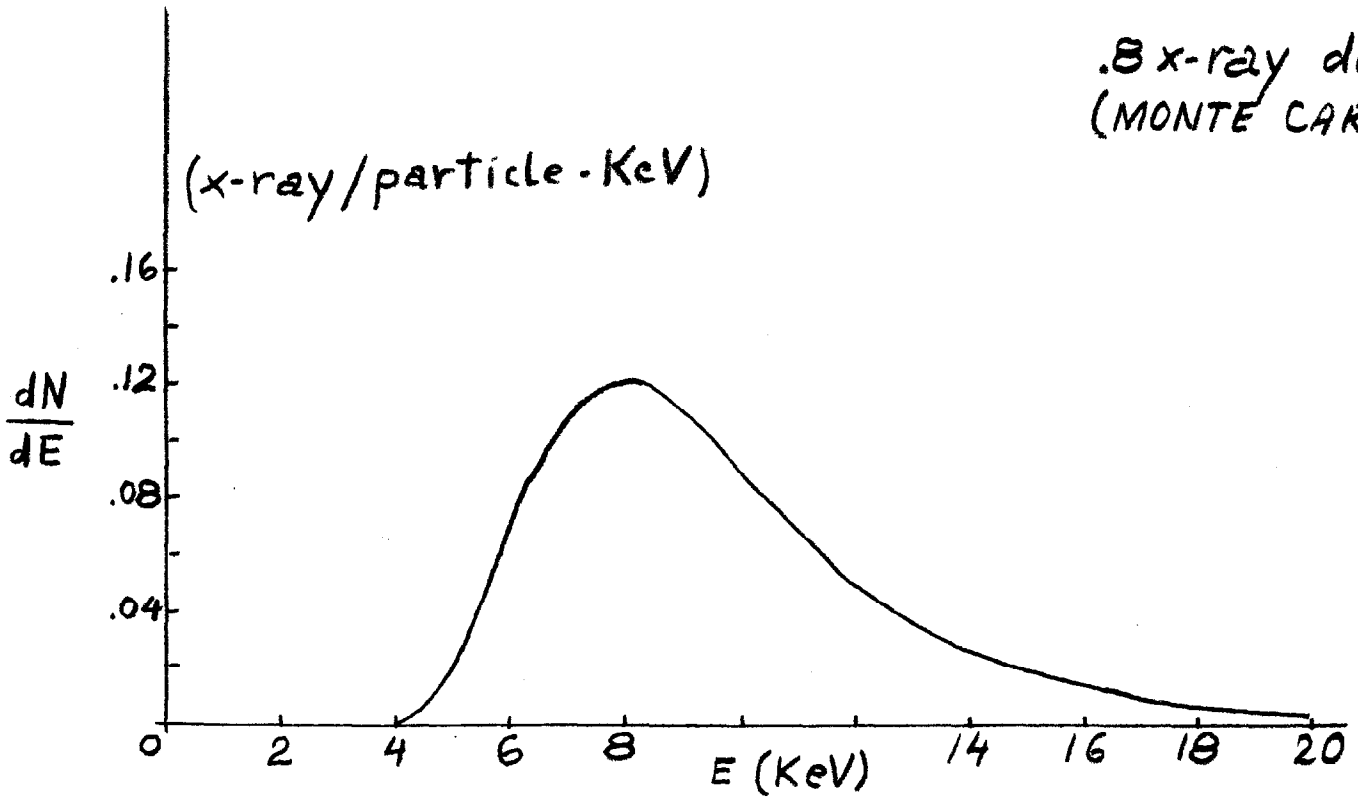

Fig. 3

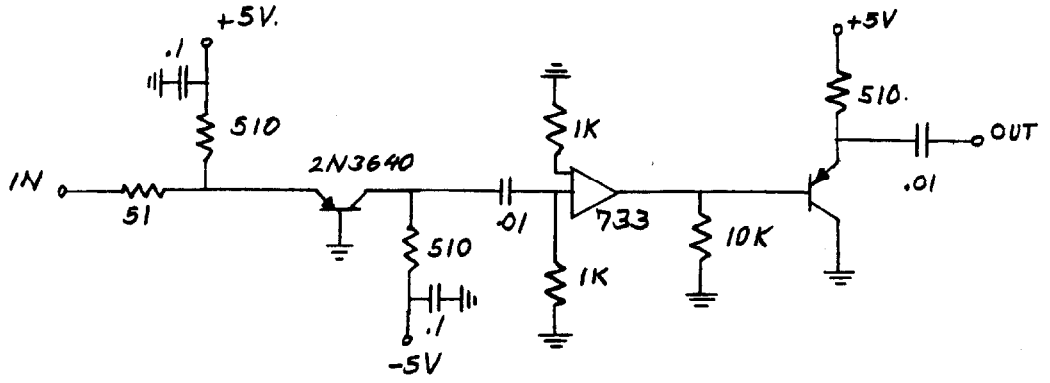

Fig. 4.

BNL TRD Test

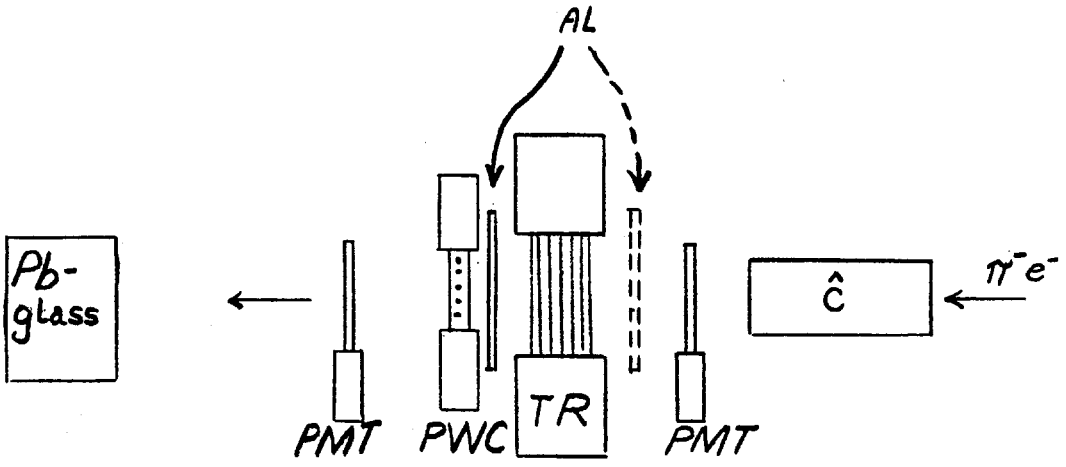

Fig. 5a. 2mm chamber

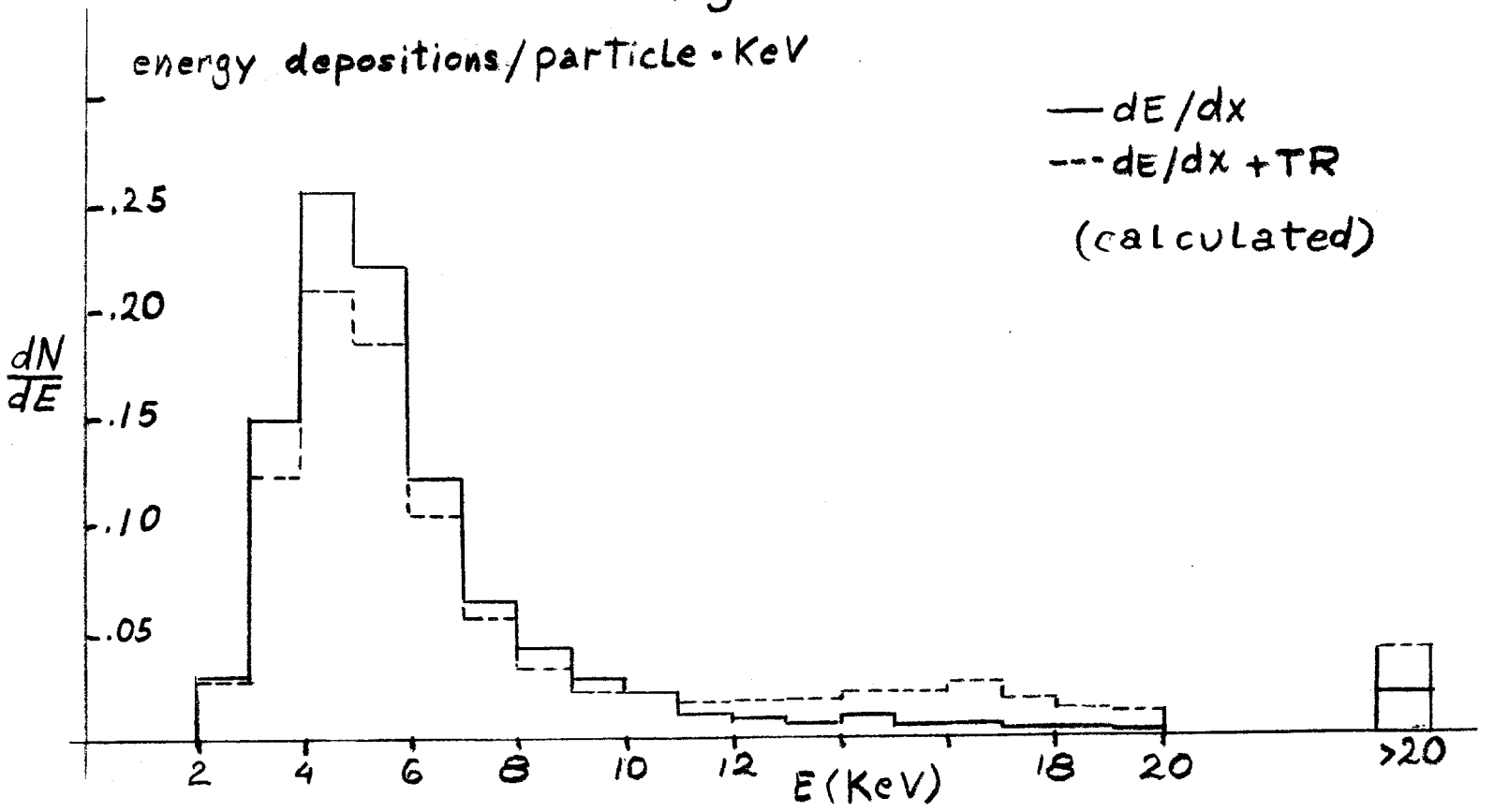

Fig. 5b. 2mm chamber

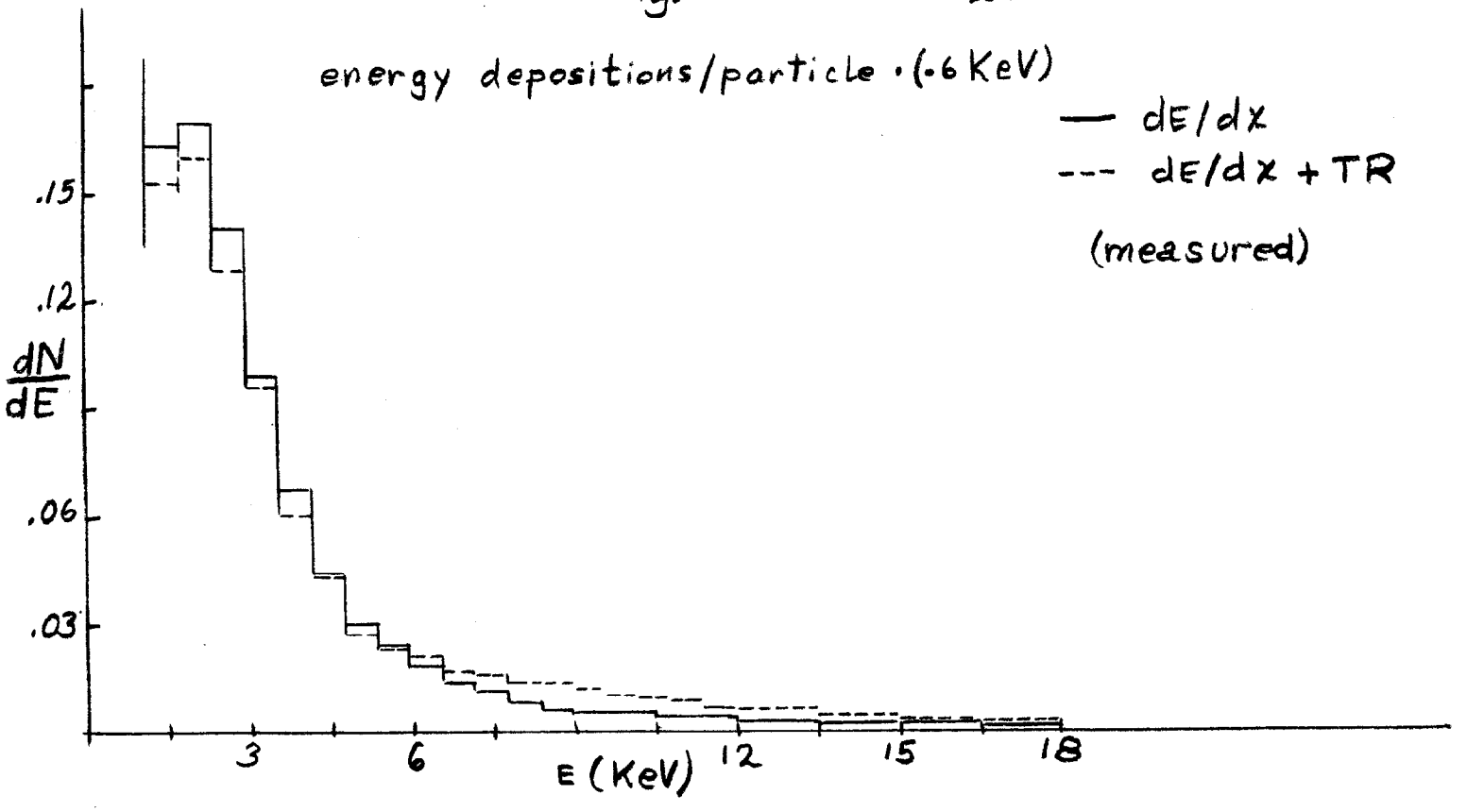

Fig. 6

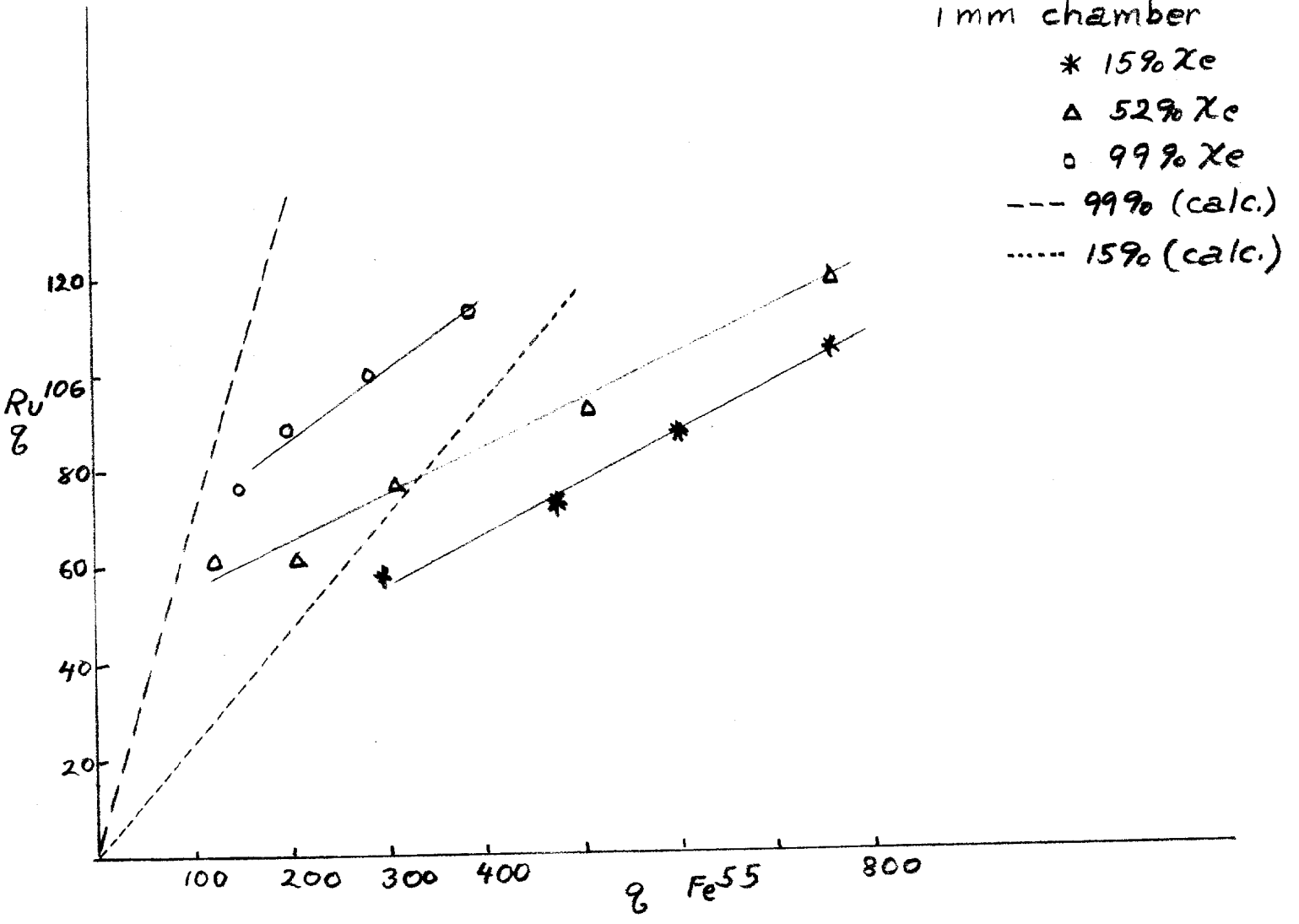
1 mm chamber
* 15% Xe
Δ 52% Xe
o 99% Xe
--- 99% (calc.)
····· 15% (calc.)
120
80
60
40
20
Ru 106
q
100
200
300
400
800
q Fe55

Fig. 7

1mm chamber
50% Xe
530 GeV π
(calc.)

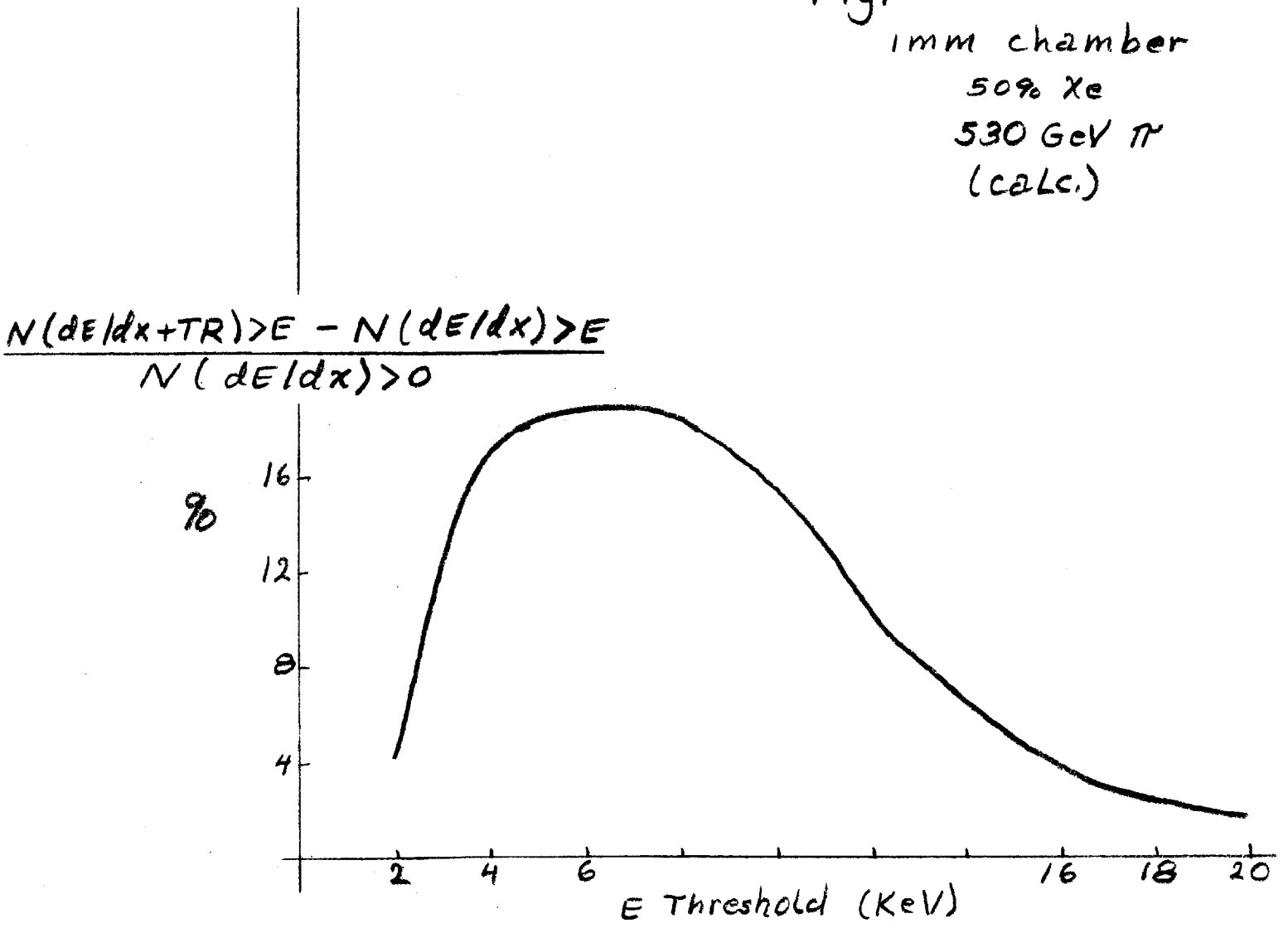

Fig. 8

1mm chamber
50% Xe
2 GeV (e^-)
32 wires
(measured)

• all
* singles only

$$\frac{N(dE/dx + TR) > E - N(dE/dx) > E}{N(dE/dx) > 0}$$

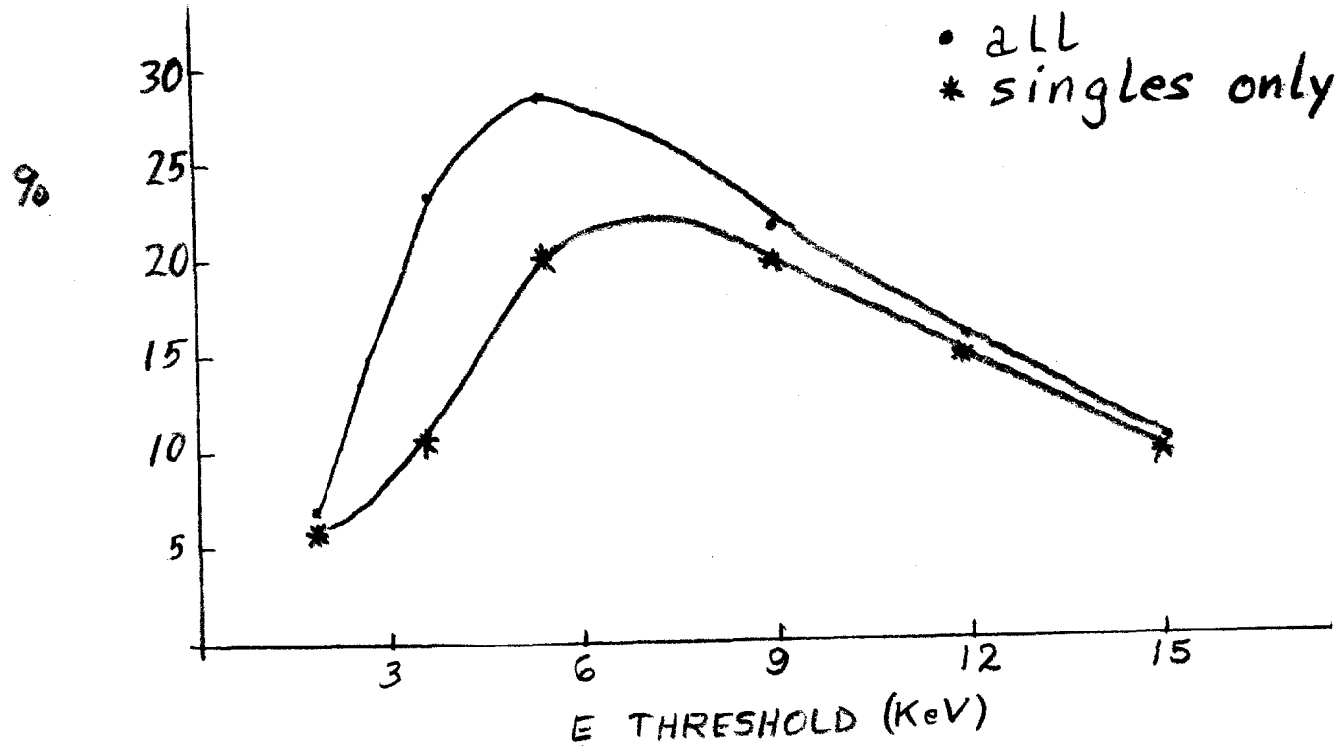

Fig. 9

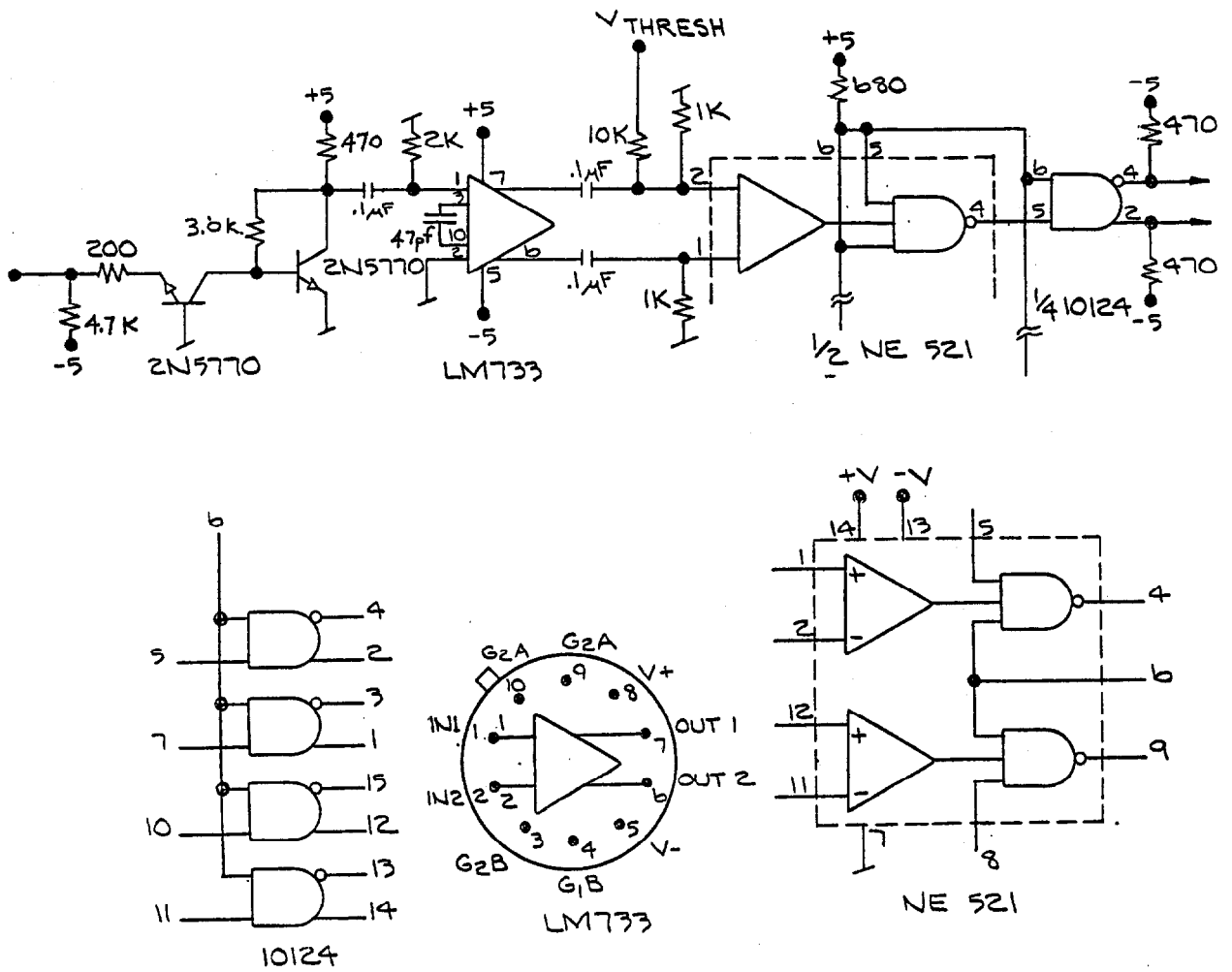

V THRESH
+5
680
-5
470
+5
470
2K
+5
10K
1K
.1μF
.1μF
3.6K
47pf
200
2N5770
4.7K
-5
2N5770
-5
LM733
.1μF
1K
1/2 NE 521
1/4 10124
470
-5
+V -V
G2A
G2A
V+
IN1
OUT 1
IN2
OUT 2
G2B
G1B
V-
LM733
10124
NE 521

Fig. 10

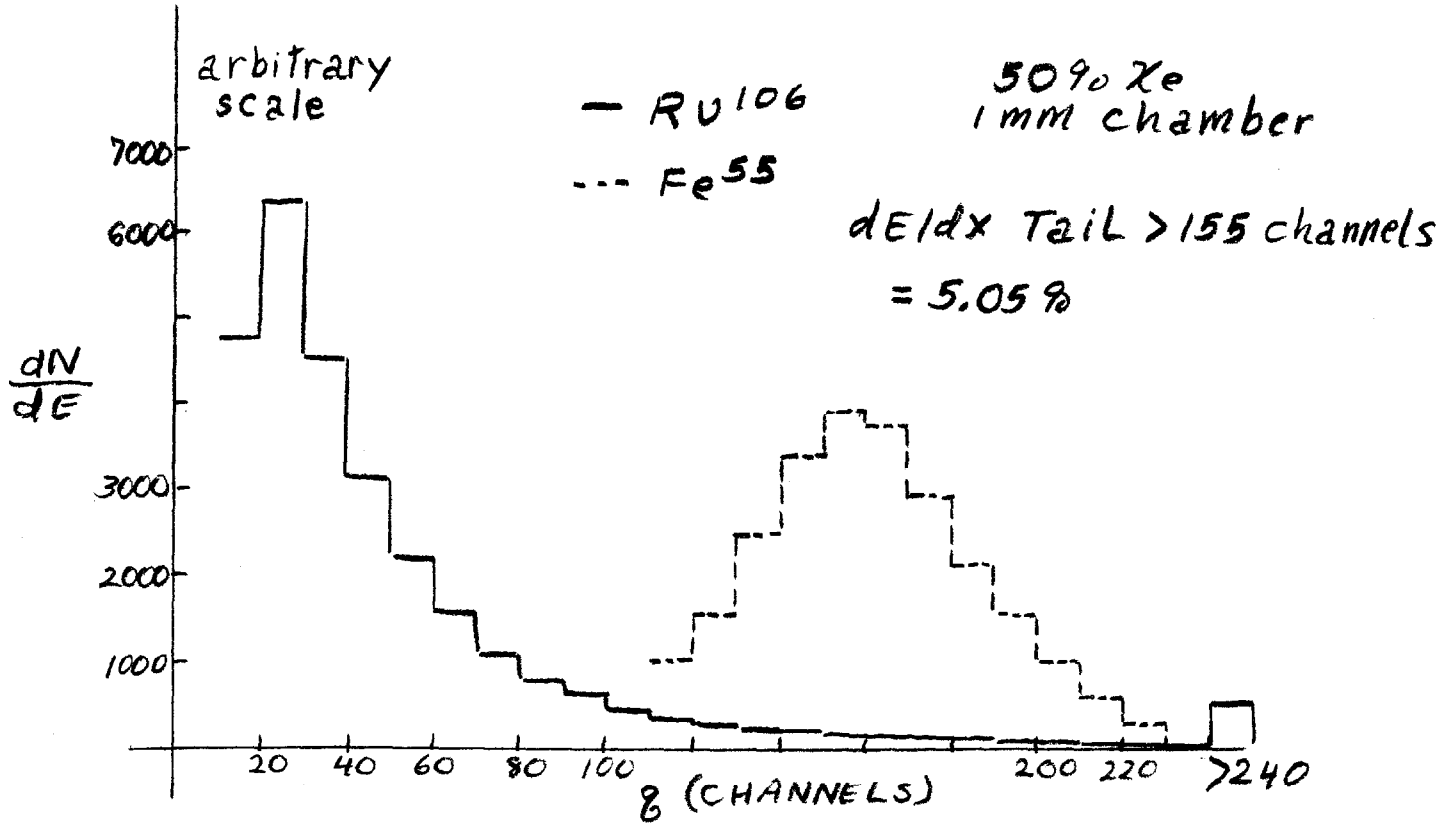
arbitrary scale
— Ru106
--- Fe55
50% Xe
1mm chamber
dE/dx Tail > 155 channels
= 5.05%
dN/dE
7000
6000
3000
2000
1000
20
40
60
80
100
200
220
>240
% (CHANNELS)